GX 12/25 EVO GEL

FULLY FEATURED COMPACT STACKER

This compact sized stacker is the ideal solution to work in confined spaces and looks both powerful and reliable. The reduced width (800mm), the lateral driving system and the wide mast positioning allow great maneuverability, stability and visibility. Built in battery battery charger with integrated cable and plug make it a plug and play unit!

GX EVO GEL

The EVO version is equipped with powerful GEL batteries that allow long endurance and large number of charging cycles. The ergonomic technopolymer tiller offers a comfortable grip. A specific electronic control enables lifting the forks with a proportional usage.

MANOEUVRABILITY

The overall width is the same as the Europallet (800 mm) to allow working in narrow spaces and corridors, increasing manoeuvrability and reducing the turning radius. The combination of side guide, wide mast and low cover offer outstanding visibility.

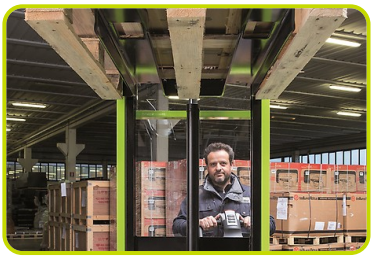

TILLER EVOLUTION

Fully integrated ergonomic technopolymer tiller system including finger tip throttle and proportional fork controls, safety pushbutton, horn, turtle button, hourmeter, battery status indicator as standard equipment.

www.pramac.com

TURTLE MODE SWITCH

Offered as standard, this function enables operating the truck in confined spaces: it allows the unit to travel with the tiller in upright position.

This function is activated by pressing the turtle button on the tiller and rotating the drive control throttle. The truck travels at limited speed.

Release the button to disable this function.

COVER

Strong ABS cover with storage compartments on top, easily removable to speed up maintenance operations. The bottom access opening enables an immediate disassembly of motor wheel, portal and tiller without lifting the machine. Schuko plug with spiral cable for an easy battery charging.

BATTERY PACK GEL

The use of powerful high energy throughput GEL batteries makes the machine extremely flexible in every application, thanks to the multiples benefits of GEL technology, such as:

1. Maintenance-free (no topping up)
2. Long service life
3. High number of cycles (IEC 60254-1)
4. Extraordinary deep discharge protection
5. Low self discharge rate
6. Superior shelf life
7. No acid stratification

www.pramac.com

Description			
1.1 Manufacturer			PR INDUSTRIAL
1.3 Drive			Electric
1.4 Operator type			Pedestrian
1.5 Load capacity	Q	kg	1200
1.6 Load centre distance	c	mm	600
1.8 Load axle to end forks	x	mm	780
1.9 Wheel base	y	mm	1234

Weights			
2.1 Service weight (battery included)		kg	570
2.2 Axle load, laden rear		kg	1187
2.2 Axle load, laden front		kg	583
2.3 Axle load, unladen front		kg	408
2.3 Axle load, unladen rear		kg	162

Tyres/Chassis			
3.1 Tyres: front wheels			POLY
3.1 Tyres: stabilizers wheels - front			POLY.C.
3.1 Tyres: rear wheels			POLY.C.
3.2 Tyre size: Steering wheels - Width		mm	76
3.2 Tyre size: Steering wheels - Diameter		mm	250
3.3 Tyre size: Load rollers - Diameter		mm	82
3.3 Tyre size: Load rollers - Width		mm	70
3.4 Tyre size: stabilizers wheels front - Diameter		mm	100
3.4 Tyre size: stabilizers wheels front - Width		mm	38
3.5 Tyre size: rear wheels - Q.ty (X=driven)		nr	2
3.5 Tyre size: front wheels - Q.ty (X=driven)		nr	1x+1
3.6 Tread, front	b10	mm	565
3.7 Tread, rear	b11	mm	410

Dimensions			
4.2 Height, mast lowered	h1	mm	1787
4.4 Lift height	h3	mm	2410
4.5 Height, mast extended	h4	mm	2992
4.9 Height of tiller in drive position max	h14	mm	1330
4.9 Height of tiller in drive position min	h14	mm	960
4.15 Height, lowered	h13	mm	90
4.19 Overall lenght	l1	mm	1760
4.20 Lenght to face of forks	l2	mm	610
4.21 Overall width (front/rear)	b1/b2	mm	800
4.22 Fork dimensions - Thickness	s	mm	70
4.22 Fork dimensions - Width	e	mm	150
4.22 Fork dimensions - Lenght	l	mm	1150
4.24 Fork carriage width	b3	mm	650
4.25 Forks width	b5	mm	560
4.32 Ground clearance, centre of wheelbase	m2	mm	20
4.34 Aisle width	Ast	mm	2210
4.35 Turning radius	Wa	mm	1430

www.pramac.com

Performance data		
5.1 Travel speed laden	km/h	4.7
5.1 Travel speed unladen	km/h	5.2
5.2 Lifting speed laden	m/s	0.11
5.2 Lifting speed unladen	m/s	0.19
5.3 Lowering speed laden	m/s	0.25
5.3 Lowering speed unladen	m/s	0.30
5.8 Max gradeability laden	%	5
5.8 Max gradeability unladen	%	10
5.10 Service brake		Electric

Electric motors		
6.1 Drive motor power	kW	0.7
6.2 Lift motor power	kW	2.2
Battery Type	Type	GEL
6.4 Battery voltage	V	24
6.4 Battery capacity, Min	Ah	105
6.4 Battery capacity, Max	Ah	105
6.5 Battery weight, Min	kg	76
6.5 Battery weight, Max	kg	80
6.6 Energy consumption according to VDI cycle	kWh/h	0.9
8.4 Sound level at driver's ear	dB(A)	62

Residual lifting capacity		
Lifting height (H3) 2500 mm	kg	1200

www.pramac.com

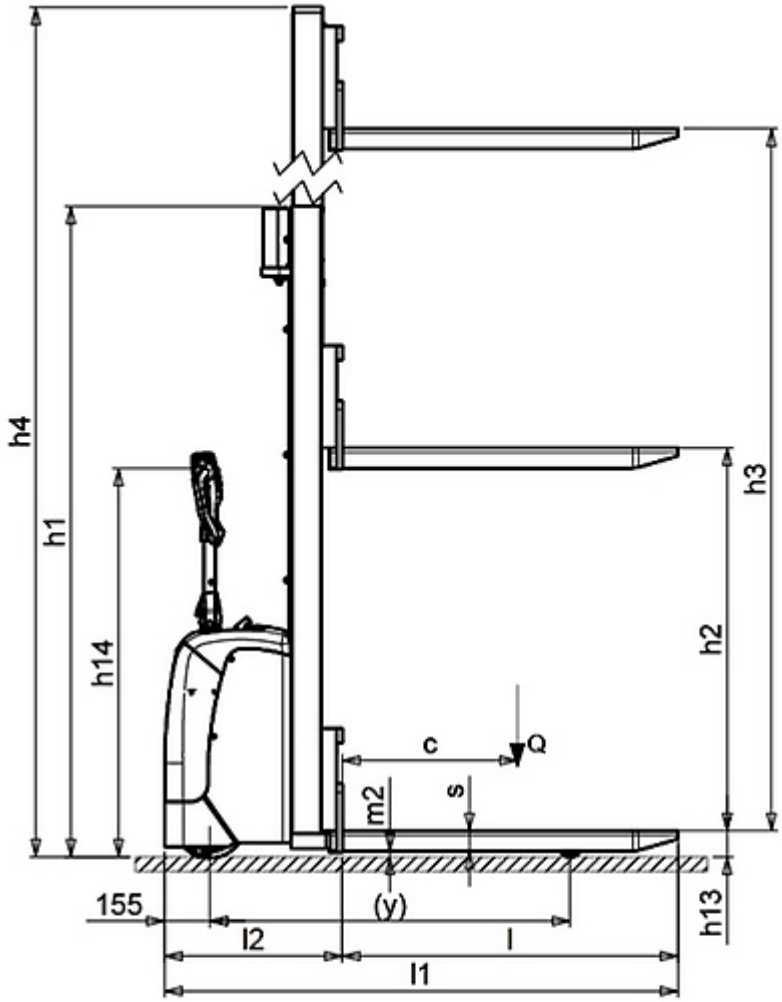

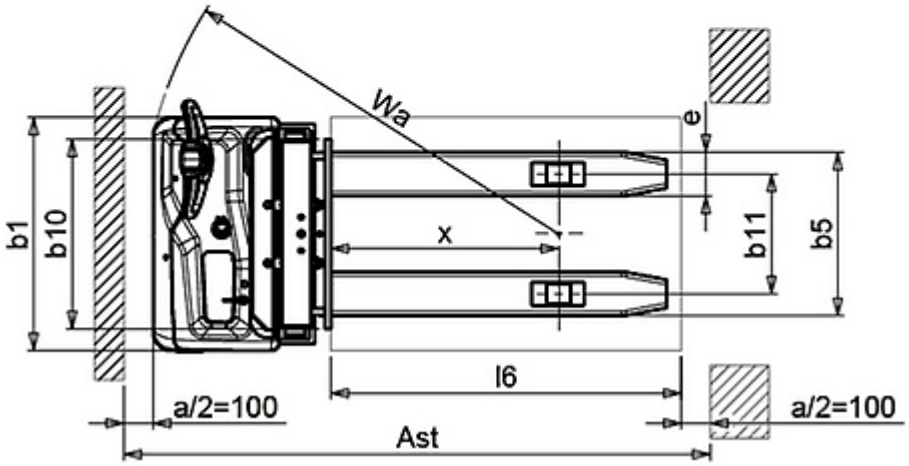

www.pramac.com

The information is aligned with the Data file at the time of download.
Printed on 23/06/2025 (ID 4678)

©2025 | PR Industrial S.r.l. – Loc. Il Piano – 53031 Casole d'Elsa (SI) – ITALY. Company subject to the management and coordination of Generac Power Systems Inc.| All rights reserved | Image shown may not reflect actual package. Specifications subject to change without notice