LX 16/16

DESIGNED FOR TOP PERFORMANCE

LX

The LX II edition is a strong and reliable partner which bridges the gap between lowduty and heavy duty material handling daily operations. Due to its durability, low maintenance LX is suitable for environments as logistic centers, terminals, production and manufacturing areas. Also the new tiller arm equipped with fork lifting and lowering proportional control improves user-friendliness and maneuverability of the truck.

1600kg Capacity

The strong LX structure, the powerful electric motors and the two lateral cylinders allow a nominal load capacity of 1600 kg with a high residual capacity

ZAPI CONTROLLER

AC technology guarantees more energy efficiency and longer battery charging duration, thus reducing maintenance cost. Furthermore the absence of brushes in the motor, the simpler motor structure and the possibility of adjusting parameters increase system reliability.

TILLER EVOLUTION

Fully integrated ergonomic technopolymer tiller system including finger tip throttle and proportional fork controls, safety pushbutton, horn, turtle button, hourmeter, battery status indicator as standard equipment.

www.pramac.com

TURTLE MODE SWITCH

Offered as standard, this function enables operating the truck in confined spaces: it allows the unit to travel with the tiller in upright position.

This function is activated by pressing the turtle button on the tiller and rotating the drive control throttle. The truck travels at limited speed.

Release the button to disable this function.

MANEUVERABILITY

The overall width has the same size than the EuroPallet (800mm) allow the unit to work in narrow spaces and corridors, increase maneuverability and reducing the turning radius.

VISIBILITY

The wide mast and central driving position allow to have a great operator visibility

BATTERY COMPARTMENT

The separate battery compartment allows the installation of high capacity battery (225Ah - 300Ah). The battery inspection is easy and comfortable trought the battery cover with hinges. As option automatic battery refilling system can be supplied as the external high frequency battery charger that can be easily plugged trough Anderson connector.

EASY MANTENANCE

Removing the strong cover allows to have the access to electric and hydraulic system as to the motorwheel and stabilizing wheels.

OPERATOR PLATFORM

The LX stacker can be equipped with cushioned stand-on foldable platform very useful for covering medium-sized distances and for intensive application.

MAST

Wide mast with sticker ruler enables the operator to easily check the forks elevation by sight.

www.pramac.com

Description				
1.1	Manufacturer			PR INDUSTRIAL
1.3	Drive			Electric
1.4	Operator type			Pedestrian
1.5	Load capacity	Q	kg	1600
1.6	Load centre distance	c	mm	600
1.8	Load axle to end forks	x	mm	820
1.9	Wheel base	y	mm	1436

Weights				
2.1	Service weight (battery included)		kg	920
2.1	Service weight, With platform - battery included		kg	960
2.2	Axle load, laden rear		kg	1632
2.2	Axle load, laden front		kg	888
2.3	Axle load, unladen front		kg	633
2.3	Axle load, unladen rear		kg	287

Tyres/Chassis				
3.1	Tyres: front wheels			RUBBER
3.1	Tyres: stabilizers wheels - front			POLY.C.
3.1	Tyres: rear wheels			POLY.C.
3.2	Tyre size: Steering wheels - Width		mm	101
3.2	Tyre size: Steering wheels - Diameter		mm	250
3.3	Tyre size: Load rollers - Diameter		mm	82
3.3	Tyre size: Load rollers - Width		mm	70
3.4	Tyre size: stabilizers wheels front - Diameter		mm	100
3.4	Tyre size: stabilizers wheels front - Width		mm	38
3.5	Tyre size: rear wheels - Q.ty (X=driven)		nr	4
3.5	Tyre size: front wheels - Q.ty (X=driven)		nr	1x
3.6	Tread, front	b10	mm	586
3.7	Tread, rear	b11	mm	390

www.pramac.com

Dimensions				
4.2	Height, mast lowered	h1	mm	1965
4.3	Normal free lifting	h2	mm	1510
4.4	Lift height	h3	mm	1510
4.5	Height, mast extended	h4	mm	1965
4.9	Height of tiller in drive position max	h14	mm	1390
4.9	Height of tiller in drive position min	h14	mm	990
4.15	Height, lowered	h13	mm	90
4.19	Overall lenght	l1	mm	1944
4.19	Overall lenght with lowered platform	l1	mm	2528
4.19	Overall lenght with raised platform	l1	mm	2068
4.20	Lenght to face of forks	l2	mm	795
4.20	Lenght to face of forks with lowered platform	l2	mm	1378
4.20	Lenght to face of forks with raised platform	l2	mm	919
4.21	Overall width (front/rear)	b1/b2	mm	800
4.22	Fork dimensions - Thickness	s	mm	70
4.22	Fork dimensions - Width	e	mm	170
4.22	Fork dimensions - Lenght	l	mm	1150
4.24	Fork carriage width	b3	mm	644
4.25	Forks width	b5	mm	560
4.32	Ground clearance, centre of wheelbase	m2	mm	20
4.34	Aisle width	Ast	mm	2365
4.34	Aisle width with lowered platform	Ast	mm	2948
4.34	Aisle width with raised platform	Ast	mm	2494
4.35	Turning radius	Wa	mm	1613
4.35	Turning radius with lowered platform	Wa	mm	2196
4.35	Turning radius with raised platform	Wa	mm	1742

Performance data			
5.1	Travel speed laden	km/h	6.0
5.1	Travel speed unladen	km/h	6.0
5.1	Travel Speed Laden with platform in lowered position	km/h	6.0
5.1	Travel speed unladen with platform in lowered position	km/h	6.0
5.1	Travel speed laden with platform in raised position or with raised forks	km/h	6.0
5.1	Travel speed unladen with platform in raised position or with raised forks	km/h	6.0
5.2	Lifting speed laden	m/s	0.13
5.2	Lifting speed unladen	m/s	0.25
5.3	Lowering speed laden	m/s	0.31
5.3	Lowering speed unladen	m/s	0.38
5.8	Max gradeability laden	%	5
5.8	Max gradeability unladen	%	10
5.10	Service brake		REVERSE CURRENT BRAKING

www.pramac.com

Electric motors			
6.1	Drive motor power	kW	1.2
6.2	Lift motor power	kW	3.2
	Battery Type	Type	Traction (C5)
6.4	Battery voltage	V	24
6.4	Battery capacity, Min	Ah	225
6.4	Battery capacity, Max	Ah	300
6.5	Battery weight, Min	kg	270
6.5	Battery weight, Max	kg	270
6.6	Energy consumption according to VDI cycle	kWh/h	1.17
8.4	Sound level at driver's ear	dB(A)	67

Residual lifting capacity		
Lifting height (H3) 1600 mm	kg	1600

www.pramac.com

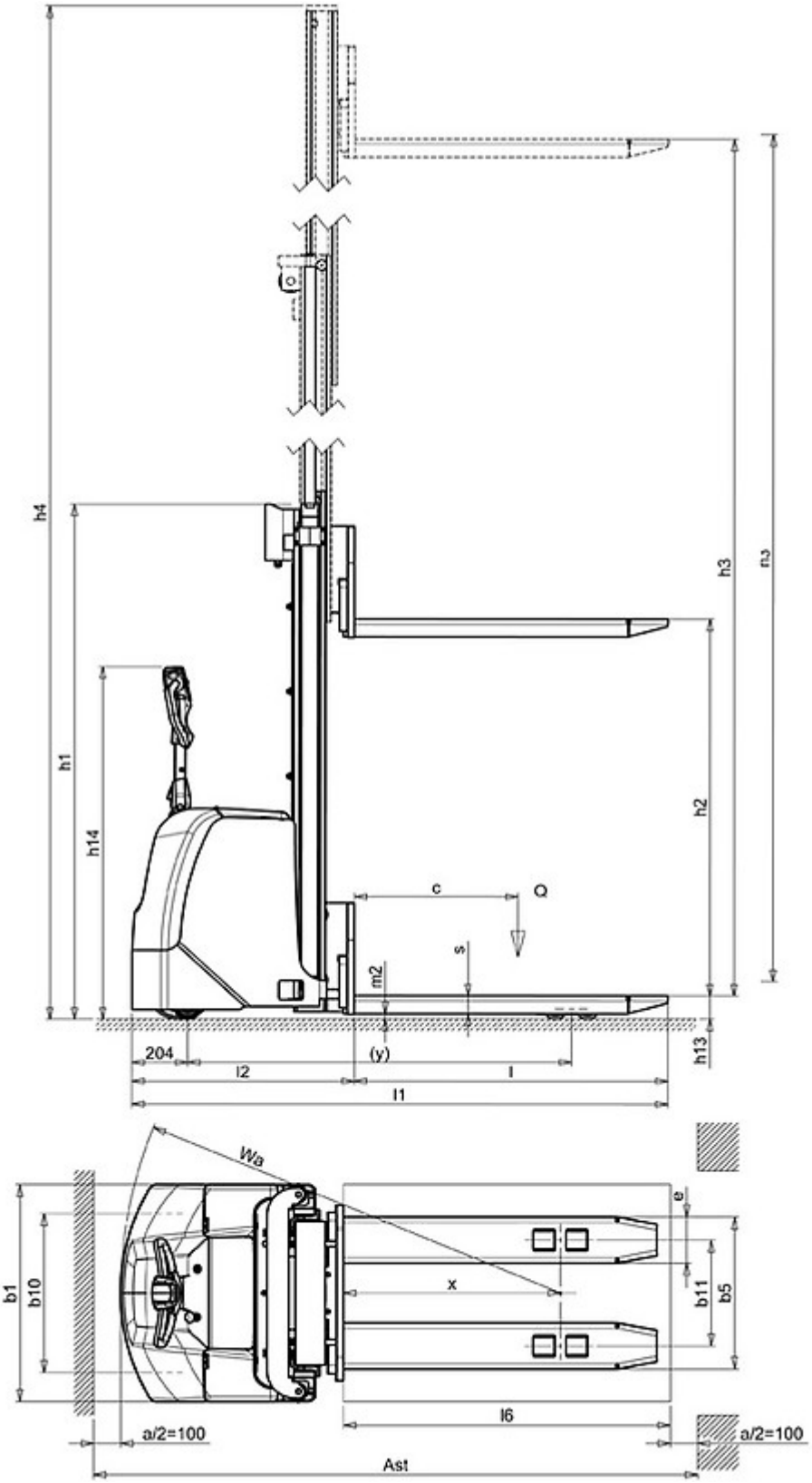

www.pramac.com

The information is aligned with the Data file at the time of download.
Printed on 23/06/2025 (ID 3108)

©2025 | PR Industrial S.r.l. – Loc. Il Piano – 53031 Casole d'Elsa (SI) – ITALY. Company subject to the management and coordination of Generac Power Systems Inc.| All rights reserved | Image shown may not reflect actual package. Specifications subject to change without notice