MX 510

MANUAL STACKER

MX STACKER

MX Series is a robust and resistant stacker perfect to lift and transport your loads. Reinforced forks, steel pulley and forks precisely driven by rollers, among its main features, make it an excellent compromise between price and performance. The machine is also equipped with a foot pedal to lift forks, which considerably reduces the operator’s effort.

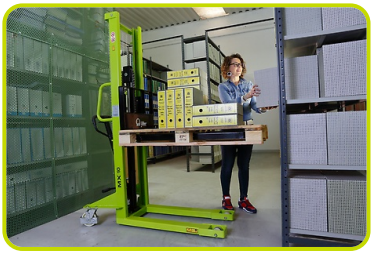

TILLER

Increased ergonomic handle thanks to plastic cover and the 3 position control lever (down, neutral, up) to make lifting and transport operation even "lighter".

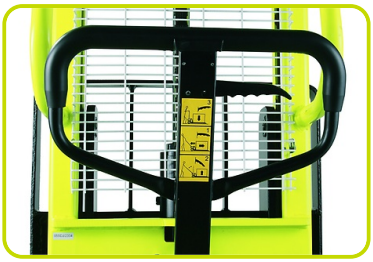

STEEL PULLEY

A sturdy chain and a strong steel pulley ensure great resistance and reliability even working at maximum load capacity.

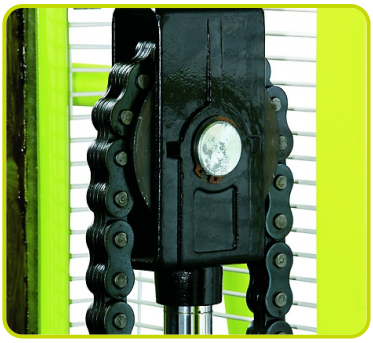

www.pramac.com

FOOT PEDAL

The foot pedal can be used instead of the handle to raise the stacker forks to the desired height.

WHEELS CONFIGURATIONS

STANDARD:
Nylon steering wheels and nylon rollers

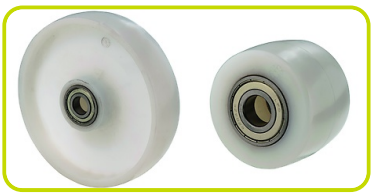

www.pramac.com

Description			
1.1 Manufacturer			LIFTER
1.3 Drive			Manual
1.4 Operator type			Pedestrian
1.5 Load capacity	Q	kg	500
1.6 Load centre distance	c	mm	600
1.8 Load axle to end forks	x	mm	800
1.9 Wheel base	y	mm	1240

Weights			
2.1 Service weight		kg	185
2.2 Axle load, laden rear		kg	483
2.2 Axle load, laden front		kg	202
2.3 Axle load, unladen front		kg	113
2.3 Axle load, unladen rear		kg	72

Tyres/Chassis			
3.1 Tyres: stabilizers wheels - front			NYLON
3.1 Tyres: rear wheels			NYLON
3.3 Tyre size: Load rollers - Diameter		mm	80
3.3 Tyre size: Load rollers - Width		mm	70
3.4 Tyre size: stabilizers wheels front - Diameter		mm	150
3.4 Tyre size: stabilizers wheels front - Width		mm	40
3.5 Tyre size: rear wheels - Q.ty (X=driven)		nr	2
3.6 Tread, front	b10	mm	600
3.7 Tread, rear	b11	mm	380

Dimensions			
4.2 Height, mast lowered	h1	mm	1490
4.3 Normal free lifting	h2	mm	910
4.4 Lift height	h3	mm	910
4.5 Height, mast extended	h4	mm	1490
4.9 Height of tiller in drive position max	h14	mm	1090
4.15 Height, lowered	h13	mm	90
4.19 Overall lenght	l1	mm	1690
4.20 Lenght to face of forks	l2	mm	540
4.21 Overall width (front/rear)	b1/b2	mm	740
4.22 Fork dimensions - Thickness	s	mm	60
4.22 Fork dimensions - Width	e	mm	170
4.22 Fork dimensions - Lenght	l	mm	1150
4.24 Fork carriage width	b3	mm	550
4.25 Forks width	b5	mm	550
4.32 Ground clearance, centre of wheelbase	m2	mm	30
4.34 Aisle width	Ast	mm	2166
4.35 Turning radius	Wa	mm	1400

Performance data			
5.2 Lifting speed laden		strokes	37
5.2 Lifting speed unladen		strokes	37
5.3 Lowering speed laden		m/s	0.16
5.3 Lowering speed unladen		m/s	0.05

www.pramac.com

Residual lifting capacity

Lifting height (H3) 1000 mm	kg	500

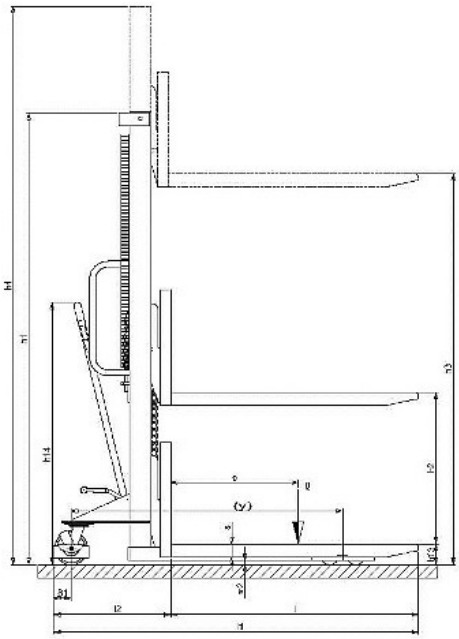

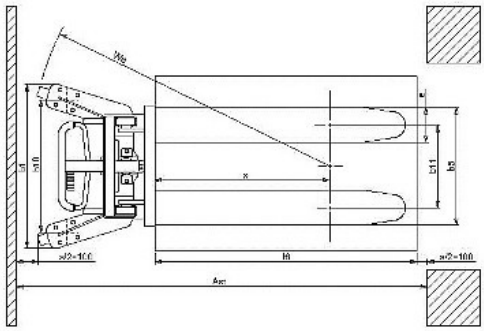

www.pramac.com

The information is aligned with the Data file at the time of download.
Printed on 30/06/2025 (ID 642)

©2025 | PR Industrial S.r.l. – Loc. Il Piano – 53031 Casole d'Elsa (SI) – ITALY. Company subject to the management and coordination of Generac Power Systems Inc.| All rights reserved | Image shown may not reflect actual package. Specifications subject to change without notice